Name:_____

# Calculate the Volume

1.

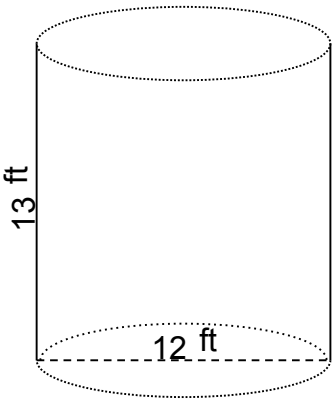


2.

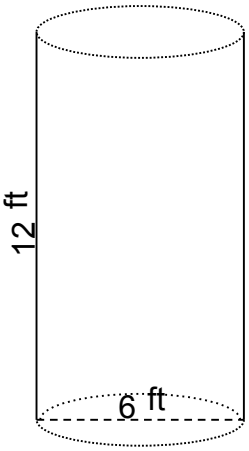


3.

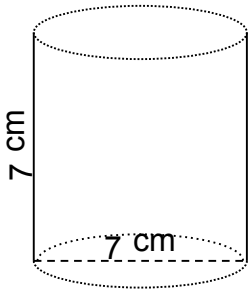


4.

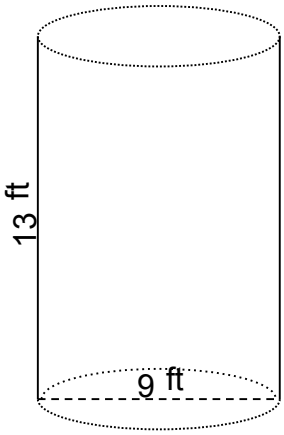


5.

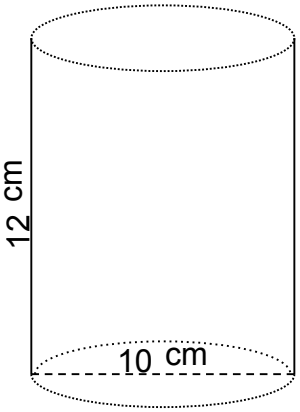


6.

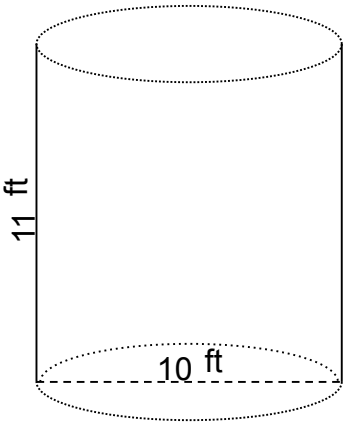

Name:_____

# Calculate the Volume

1.

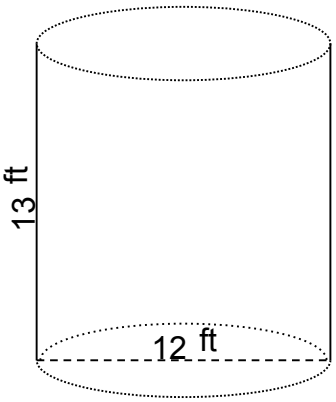


V = 1,470.27 $ft^3$

2.

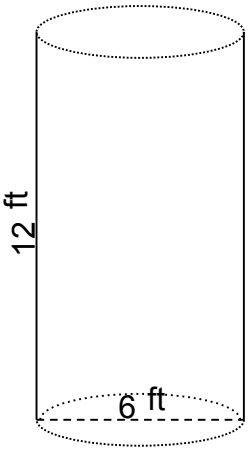


V = 339.29 $ft^3$

3.

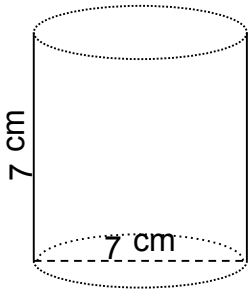


V = 269.39 $cm^3$

4.

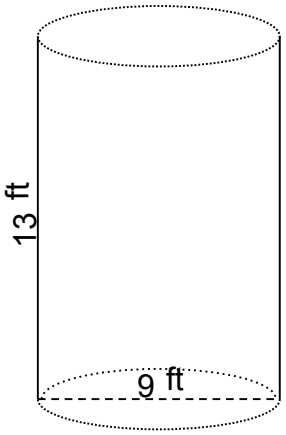


V = 827.02 $ft^3$

5.

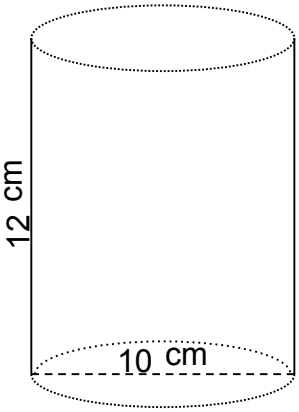


V = 942.48 $cm^3$

6.

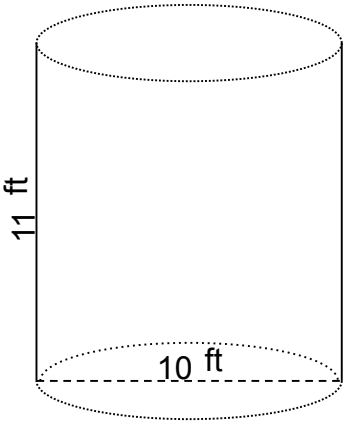


V = 863.94 $ft^3$