Name:

Area and Circumference of Circles

Can you calculate the area AND circumference of each circle?

Calculate the area and circumference of each circle.

1.

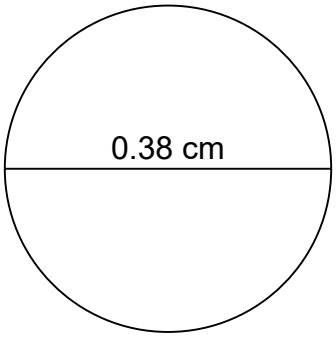

2.

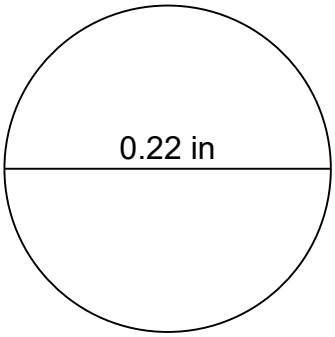

3.

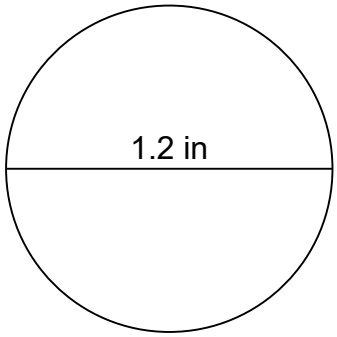

4.

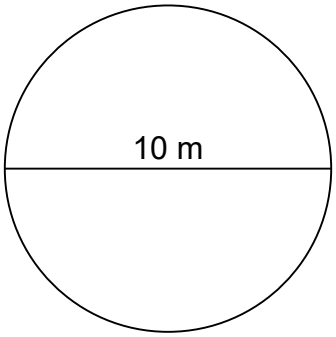

5.

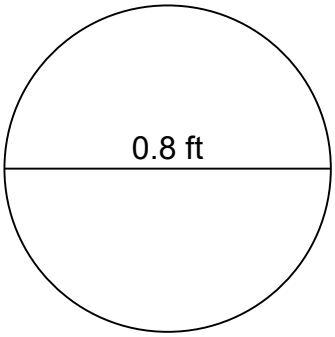

6.

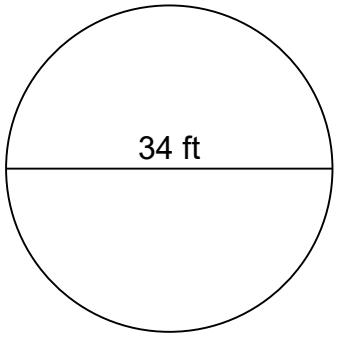

7.

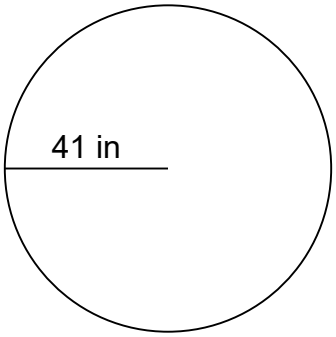

8.

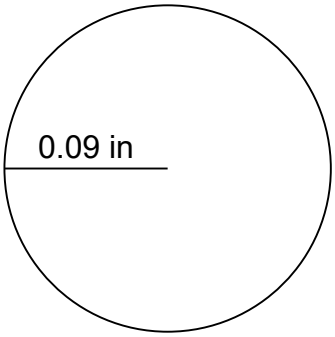

9.

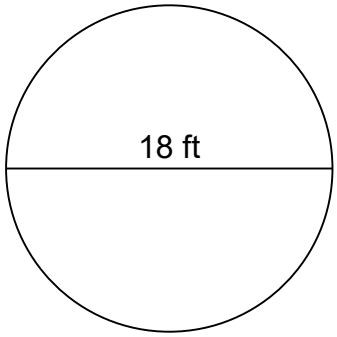

© https://worksheetplace.com

Score: /9

Name:

Area and Circumference of Circles

Can you calculate the area AND circumference of each circle?

Calculate the area and circumference of each circle.

1.

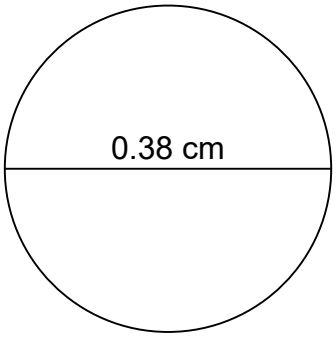

C=1.1932 cm
A=0.113354 cm²

2.

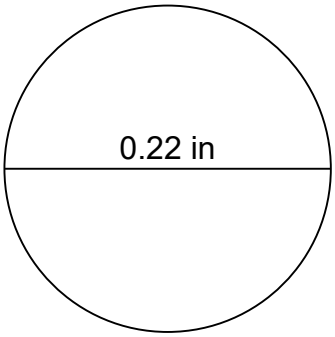

C=0.6908 in
A=0.037994 in²

3.

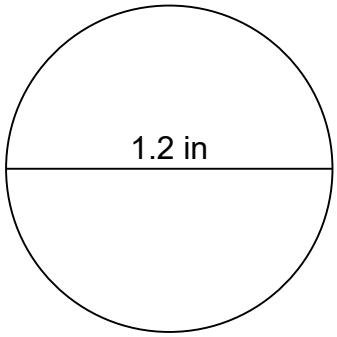

C=3.768 in
A=1.1304 in²

4.

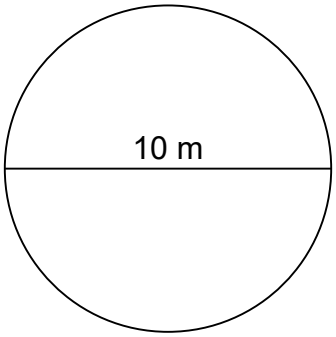

C=31.40 m
A=78.50 m²

5.

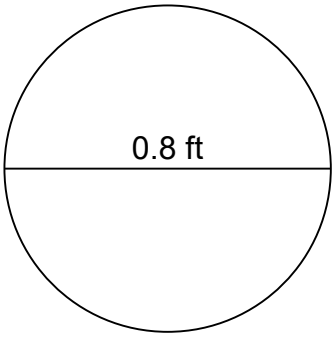

C=2.512 ft
A=0.5024 ft²

6.

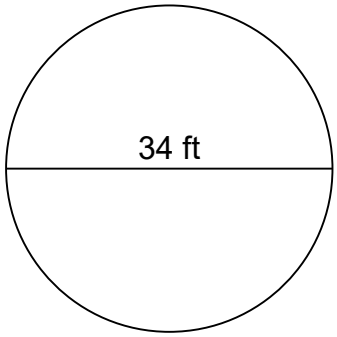

C=106.76 ft
A=907.46 ft²

7.

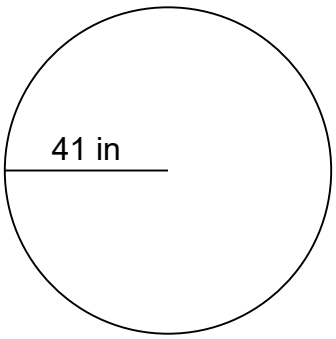

C=257.48 in
A=5,278.34 in²

8.

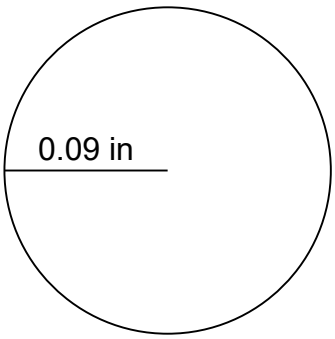

C=0.5652 in
A=0.025434 in²

9.

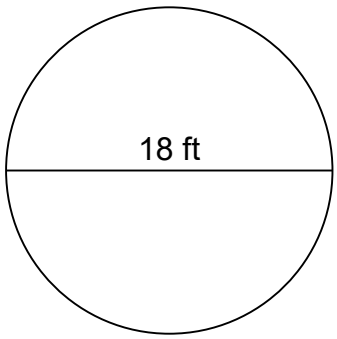

C=56.52 ft
A=254.34 ft²

© https://worksheetplace.com

Score: /9